for more past questions and solutions download kawlo kawlo app or visit http://www.gcerevision.com

Question 1: /10 marks

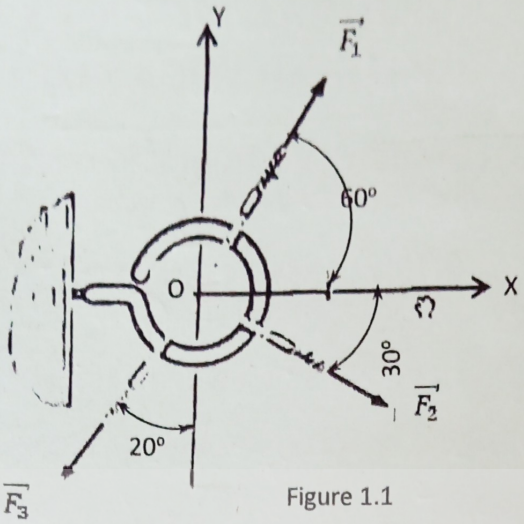

Figure 1.1

The three concurrent forces acting on the screw eye.

a. Express the components of each force exerted on the screw. **(6 mks)**
b. Determine analytically the resultant of the three forces. **(4 mks)**

Question 2: (10 marks)

The guy wires Shows on Figure 2.1 are used to support the telephone pole.

a. Calculate the angle Θ **(2 mks)**
b. Represent the force in each wire in Cartesian vector form. Neglect the diameter of the pole. **(2 mks)**
c. Write the Cartesian component of distance $\overrightarrow{AC}$ **(2 mks)**
d. Write the Cartesian component of distance $\overrightarrow{BO}$ **(2 mks)**
e. Determine the moment $\overrightarrow{F_B} \wedge \overrightarrow{BO}$ **(2 mks)**

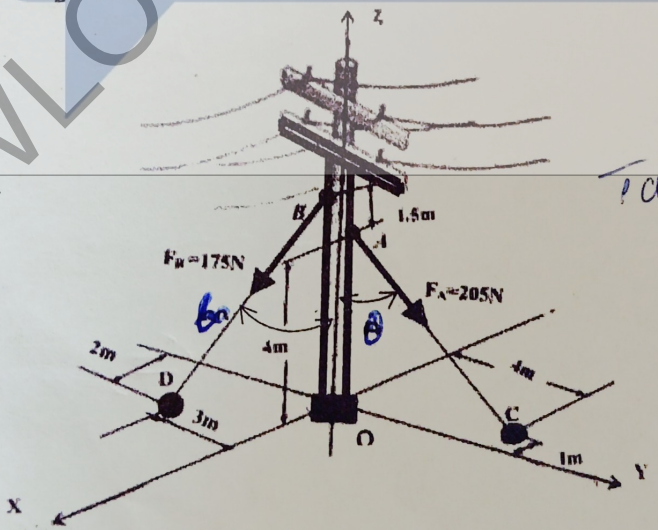

Figure 2.1

PDF Scanner ACE Scanner
for more past questions and solutions download kawlo kawlo app or visit http://www.gcerevision.com

for more past questions and solutions download kawlo kawlo app or visit http://www.gcerevision.com

Question 3: (10 marks)

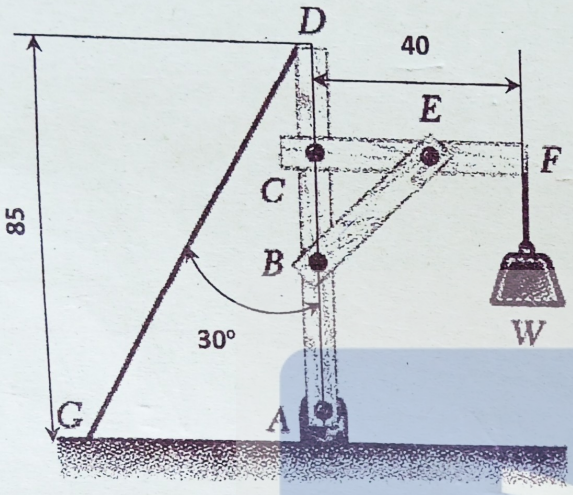

Figure 3.1

Figure 1 below shows a lifting crane carrying a load weighted W= 500N

Determine the action force at pint A and the tension in the cable AG.

Question 4: (10 marks)

The drum of a spin drier with an internal diameter of 0.50 m rotates at a constant 3500 revolutions per minute. Find

a. The instantaneous angular speed ω of the drum in units of rad s− 1; **(3 mks)**

b. The instantaneous speed (in ms− 1) of a sock stuck to the inside surface of the drum of the drier. **(4 mks)**

c. The time taken in s **(3 mks)**

Question 5: (10 marks)

KAWLO (gcerevision.com)

PDF Scanner ACE Scanner
for more past questions and solutions download kawlo kawlo app or visit http://www.gcerevision.com

for more past questions and solutions download kawlo kawlo app or visit http://www.gcerevision.com

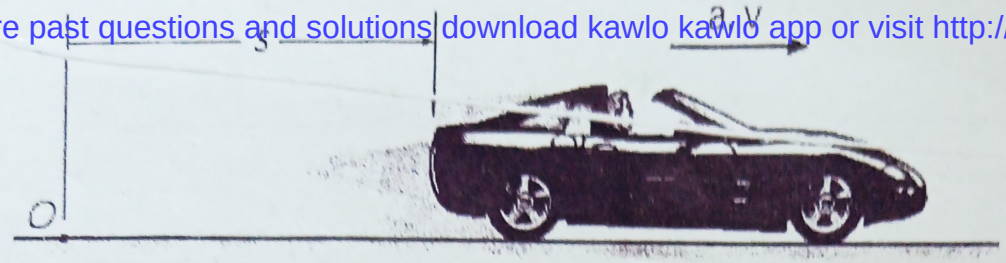

Figure 5.1

The car on the above figure moves in a straight line such that for a short time its velocity is defined by $v = 3t^2 + 2t$. Where **t** is in seconds.

a. Determine its velocity at t = 3 s. **(2marks)**

b. Give the equation of acceleration. **(3 mks)**

c. Determine the acceleration at t= 3s. **(2 mks)**

d. Write the equation of the displacement X **(3 mks)**

Question 6: (10marks)

A stone of mass m= 0.40 Kg is thrown upward with a speed of 10.0 m/s from the top of a building of 40.0 m high.

a. Determine the potential energy of the stone just before it is the thrown. **(2mks)**

b. Determine the kinetic energy of the stone. **(3mks)**

c. Deduce the potential energy from the top of the building to the highest distance, (just before the stone start taking down). **(2mks)**

d. Determine the total potential energy when the stone touch the ground. **(3mks)**

Question 7: (10marks)

A car at rest is pulled from a distance of 500 km in 2hours at constant speed, the pulling force T is 20,000N.

a. Evaluate the work done. **(2mks)**

b. Determine the power develop. **(2 mks)**

c. Calculate the velocity of the car. **(3 mks)**

d. Determine its kinetic energy given that the mass of the car is M= 1ton. **(3 mks)**

KAWLO (gcerevision.com)

PDF Scanner ACE Scanner

for more past questions and solutions download kawlo kawlo app or visit http://www.gcerevision.com

for more past questions and solutions download kawlo kawlo app or visit http://www.gcerevision.com

ANSWER SHEET

Question 1:

a. Express the components of each force exerted on the screw.

$\vec{F_1} \begin{pmatrix} F_1 \cos 60^\circ \\ F_1 \sin 60^\circ \end{pmatrix}$ $\vec{F_2} \begin{pmatrix} F_2 \cos 30^\circ \\ -F_2 \sin 30^\circ \end{pmatrix}$ $\vec{F_3} \begin{pmatrix} -F_3 \sin 20^\circ \\ -F_3 \cos 20^\circ \end{pmatrix}$

$F_{1x} = F_1 \cos 60^\circ$ $F_{2x} = F_2 \cos 30^\circ$ $F_{3x} = -F_3 \sin 20^\circ$

$F_{1y} = F_1 \sin 60^\circ$ $F_{2y} = -F_2 \sin 30^\circ$ $F_{3y} = -F_3 \cos 20^\circ$

b. Determine analytically the resultant of the three forces.

$\|\vec{F}\| = \sqrt{(F_{1x} + F_{2x} + F_{3x})^2 + (F_{1y} + F_{2y} + F_{3y})^2}$

$\Rightarrow \|\vec{F}\| = \sqrt{(F_1 \cos 60^\circ + F_2 \cos 30^\circ - F_3 \sin 20^\circ)^2 + (F_1 \sin 60^\circ - F_2 \sin 30^\circ - F_3 \cos 20^\circ)^2}$

$\Rightarrow = \sqrt{\left[(F_1 \cos 60^\circ + F_2 \cos 30^\circ - F_3 \sin 20^\circ)^2 + (F_1 \sin 60^\circ - F_2 \sin 30^\circ - F_3 \cos 20^\circ)^2\right]}$

$= \left[(F_1 \cos 60^\circ + F_2 \cos 30^\circ - F_3 \sin 20^\circ)^2 + (F_1 \sin 60^\circ - F_2 \sin 30^\circ - F_3 \cos 20^\circ)^2\right]^{1/2}$

PDF Scanner ACE Scanner

for more past questions and solutions download kawlo kawlo app or visit http://www.gcerevision.com

for more past questions and solutions download kawlo kawlo app or visit http://www.gcerevision.com

Question 2:

a. Calculate the angle θ

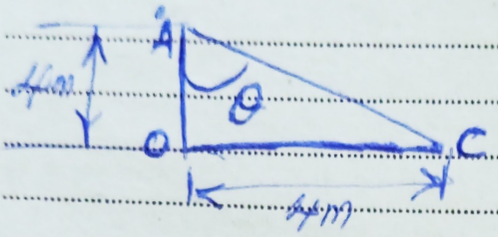

$\tan\theta = \frac{4}{4} = 1$

$\theta = \tan^{-1}(1) = 45^\circ$

b. Represent the force in each wire in Cartesian vector form. Neglect the diameter of the pole.

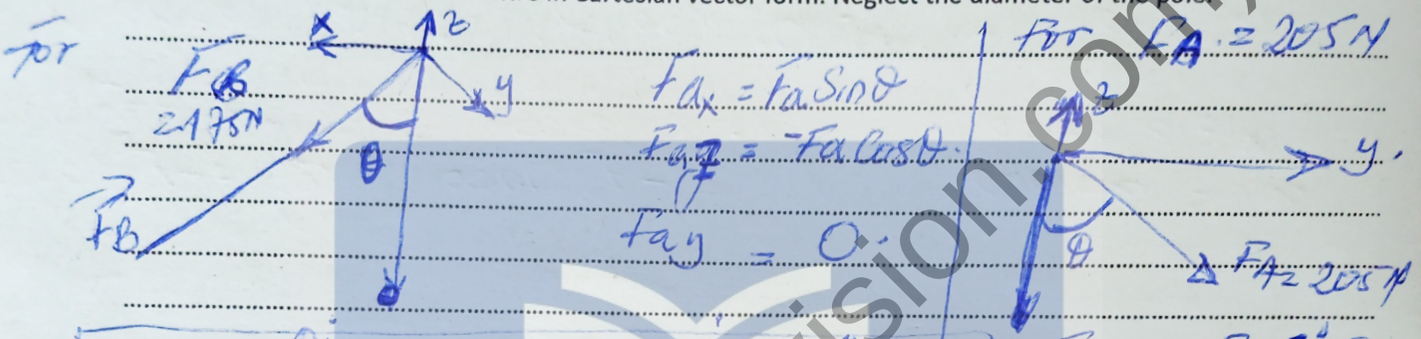

$\Rightarrow \vec{F_A} = F_A(\sin\theta\, j - \cos\theta\, k)$ and $\vec{F_B} = (F_B \sin\theta\, j - F_B \cos\theta\, k)$

c. Write the Cartesian component of distance $\overrightarrow{AC}$

$AC = \begin{pmatrix} -1 \\ 4 \\ -4 \end{pmatrix} \Rightarrow \overrightarrow{AC} = -i + 4j - 4k$

d. Write the Cartesian component of distance $\overrightarrow{BO}$

$BO \begin{pmatrix} 0 \\ 0 \\ -5.5 \end{pmatrix} \Rightarrow \overrightarrow{BO} = (-5.5k)$

e. Determine the moment $\vec{F_B} \wedge \overrightarrow{BO}$

KAWLO (gcerevision.com)

PDF Scanner ACE Scanner

for more past questions and solutions download kawlo kawlo app or visit http://www.gcerevision.com

for more past questions and solutions download kawlo kawlo app or visit http://www.gcerevision.com

$\vec{F_B} \wedge \vec{BO} = \begin{pmatrix} 0 \\ F_B\sin\theta \\ -F_B\cos\theta \end{pmatrix} \wedge \begin{pmatrix} 0 \\ 0 \\ -5.5 \end{pmatrix}$

$\Rightarrow \vec{F_B} \wedge \vec{BO} = \begin{pmatrix} 0 \\ -F_B\sin\theta(5.5) \end{pmatrix} \vec{i} - (0)\vec{j} + 0\vec{k}$

$\Rightarrow \vec{F_B} \wedge \vec{BO} = -5.5 \times 175 \sin 45^\circ = -680.6\ N.m$

$\Rightarrow \boxed{\vec{F_B} \wedge \vec{BO} = -680.6\ N.m}$

Question 3:

Determine the action force at pint A and the tension in the cable AG

Data:

Weight: $W = 500N$

Isolation of the material system:

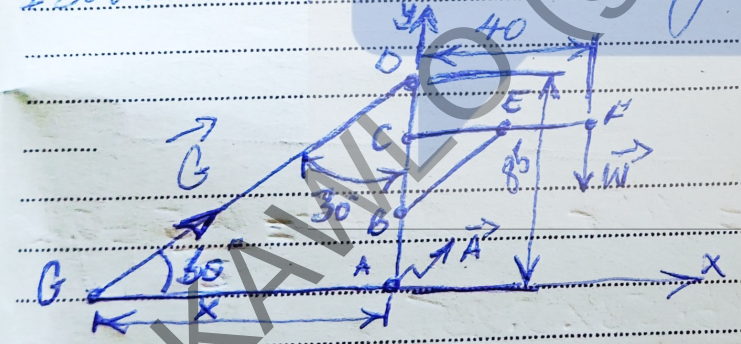

Calculation of $GA = X$:

Knowing that: $\tan 30^\circ = GA/OA = X/85$

$\Rightarrow \tan 30^\circ = X/85 \Rightarrow X = 85\tan 30^\circ$

$= \boxed{49cm}$

- Calculation of the reactions at A and G

F_1P_2S:

$\sum \vec{F_{ext}} = \vec{0} \Rightarrow \vec{G} + \vec{A} + \vec{W} = \vec{0}$ ①

$\sum \vec{M_{ext}}_A = \vec{0} \Rightarrow \vec{M}_A + \vec{M}_W = \vec{0}$ ②

Decomposition of external Forces:

$\vec{G}\begin{pmatrix} G\cos 60^\circ \\ G\sin 60^\circ \end{pmatrix} \quad \vec{W}\begin{pmatrix} 0 \\ -W \end{pmatrix} \quad \vec{A}\begin{pmatrix} Ax \\ Ay \end{pmatrix}$

② $\Rightarrow \vec{AG} \wedge \vec{G} + \vec{AW} \wedge \vec{W} = \vec{0}$

$\Rightarrow \begin{pmatrix} -X \\ 0 \end{pmatrix} \wedge \begin{pmatrix} G\cos 60^\circ \\ G\sin 60^\circ \end{pmatrix} + \begin{pmatrix} 40 \\ 0 \end{pmatrix} \wedge \begin{pmatrix} 0 \\ -W \end{pmatrix} = 0$

$\Rightarrow -XG\sin 60^\circ - 40W = 0$

$\Rightarrow G = \frac{40W}{-X\sin 60^\circ}$

$\Rightarrow G = \frac{40 \times 500}{-85\sin 60^\circ} = -288.67$

$\Rightarrow \|\vec{G}\| = 288.67N$

① $\Rightarrow P_1J_0X = G\cos 60^\circ + AX = 0$

$\Rightarrow AX = -G\cos 60^\circ = -144.33$

$P_1J_0Y: G\sin 60^\circ - W + Ay = 0 \Rightarrow Ay = -G\sin 60^\circ + W = 250$

$\Rightarrow \|\vec{A}\| = \sqrt{(Ax)^2 + (Ay)^2} = \boxed{288.67N}$

Tension on the cable: $\boxed{288.67N}$

KAWLO (gcerevision.com)
PDF Scanner ACE Scanner
for more past questions and solutions download kawlo kawlo app or visit http://www.gcerevision.com

for more past questions and solutions download kawlo kawlo app or visit http://www.gcerevision.com

Tension in the cable DG

Solution of the Cable DG

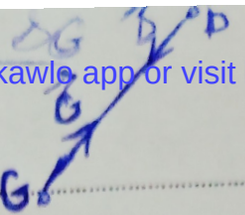

Knowing that the cable GD is in equilibrium under the action of two external forces $\overrightarrow{||G||}$ and $\overrightarrow{||D||}$ where $||G|| = 288.67$ and $||\overrightarrow{G}|| = ||\overrightarrow{D}||$

Therefore, the tension, in the cable = **288.67N**

Question 4:

a. Find the instantaneous angular speed ω of the drum in units of rad s– 1;

$D = 0.50\,m$

$N = 3500\ rev/min$

Knowing that $\omega = \frac{2\pi N}{60} \Rightarrow \omega = \frac{2\pi \times 3500}{60}$

$\Rightarrow \omega =$ **366.52 rad/seconds**

b. The instantaneous speed (in ms– 1) of a sock stuck to the inside surface of the drum of the drier.

Knowing that $V = \omega r$ where $r = \frac{0.5}{2} = 0.25$

$\Rightarrow V = 366.52 \times 0.25$

$\Rightarrow V =$ **91.63 m/s**

KAWLO (gcerevision.com)

PDF Scanner ACE Scanner

for more past questions and solutions download kawlo kawlo app or visit http://www.gcerevision.com

for more past questions and solutions download kawlo kawlo app or visit http://www.gcerevision.com

c. The time taken in s

To find the time taken for one revolution (Period T) we use the formular: $T = \frac{1}{f}$ where f is the frequency.

also, knowing that frequency in Hz = $\frac{RPM}{60}$ $\Rightarrow f = \frac{3500}{60}$

$\Rightarrow f = 58.33 Hz$.

Therefore Period $(T) = \frac{1}{f} = \frac{1}{58.33 Hz} =$ **0.01714 seconds**

or we can use the formula $t = \frac{2\pi r}{v} = \frac{2\pi \times 0.25}{91.63} =$ **0.01714 seconds**

Question 5:

a. Determine its velocity at t = 3 s.

Velocity $(V) = 3t^2 + 2t$.

at $t = 3s$: $V = 3(3)^2 + 2(3) = 3(9) + 6 = 27 + 6$

$= 33 m/s$

$\Rightarrow$ **$V = 33 m/s$**

b. Give the equation of acceleration.

if $V = 3t^2 + 2t$. then knowing that

$a = \frac{dV}{dt} \Rightarrow a = \frac{d(3t^2 + 2t)}{dt} = 6t + 2$

$\Rightarrow$ **$a = 6t + 2$**

KAWLO (gcerevision.com)

PDF Scanner ACE Scanner

for more past questions and solutions download kawlo kawlo app or visit http://www.gcerevision.com

for more past questions and solutions download kawlo kawlo app or visit http://www.gcerevision.com

c. Determine the acceleration at t= 3s.

at $t = 3(s) \Rightarrow a = 6(3) + 2$

$\Rightarrow a = 18 + 2 = \boxed{20 m/s^2}$

$\Rightarrow \boxed{a = 20 m/s^2}$

d. Write the equation of the displacement X

Knowing that $X = \int \frac{dx}{dt}$ where $V = 3t^2 + 2t$

$\Rightarrow V = \int 3t^2 dt + \int 2t dt = \frac{3t^3}{3} + \frac{2t^2}{2} + C$

$= \boxed{t^3 + t^2 + c}$

Question 6:

a. Determine the potential energy of the stone just before it is thrown.

Data:
- Mass (m) = 0.40kg
- Initial velocity (v) = 40m/s (upward)
- Height of the building h = 40m
- Acceleration due to gravity (g) = 9.8 m/s²

Knowing that potential energy P.E = m.g.h

$\Rightarrow PE = 0.4 \times 9.8 \times 40$

$\Rightarrow PE = 0.4 \times 9.8 \times 40$

$= \boxed{156.96 \text{ Joules}}$

b. Determine the kinetic energy of the stone.

PDF Scanner ACE Scanner

for more past questions and solutions download kawlo kawlo app or visit http://www.gcerevision.com

for more past questions and solutions download kawlo kawlo app or visit http://www.gcerevision.com

Knowing that kinetic energy (KE) is

$KE = \frac{1}{2}mv^2 = \frac{1}{2}\, 0.4 \times 10^2$

$\Rightarrow KE = 0.5 \times 0.40 \times 100 = 0.2 \times 100 = 20$ Joules

$\Rightarrow$ Kinetic energy: $\boxed{KE = 20 \text{ joules}}$

c. Deduce the potential energy from the top of the building to the highest distance.

Let the highest distance be $= h_2$.

Knowing that at the highest point $KE = PE$

$\Rightarrow \frac{1}{2}mv^2 = Mgh_2 \Rightarrow 20 = 0.4 \times 9.81\, h_2$

$\Rightarrow h_2 = \frac{20}{0.4 \times 9.81} \Rightarrow h_2 = 5.10\,m$. The total height

$h_{total} = h_1 + h_2 = 40 + 5.10 = 45.10$. Therefore the potential energy at the highest point $= Mg\, h_{total} = 0.40 \times 9.81 \times 45.10$

$\Rightarrow \boxed{PE = 176.97 \text{ joules}}$

Determine the total potential energy when the stone touch the ground.

When the stone touches the ground, it's potential energy relative to the ground level would be zero since $h = 0$

Therefore: $\boxed{PE \text{ at ground level} = 0}$

Question 7:

a. Evaluate the work done.

Data:

- Distance $(d) = 500\,Km = 500{,}000$ meters (Since $1Km = 1000$ meters)
- time $(t) = 2$ hours $= 2 \times 3600s = 7200$ seconds (Since $1h = 3600$ seconds)

Force $(T) = 20{,}000N$, Mass $(M) = 1$ ton $= 1000Kg$

Knowing that work done: $W = F \times d \Rightarrow W = 20{,}000 \times 500{,}000$

$\Rightarrow W = 10{,}000{,}000{,}000$ Joules $= 10 \times 10^{10}$ joules or $10GJ$

$\Rightarrow \boxed{W = 10 \times 10^{10} \text{ Joules} = 10\,GJ}$

ACE Scanner
for more past questions and solutions download kawlo kawlo app or visit http://www.gcerevision.com

for more past questions and solutions download kawlo kawlo app or visit http://www.gcerevision.com

b. Determine the power develop.

Knowing that Power $P = \frac{\text{Work done}}{\text{Time taken}}$

$\Rightarrow P = \frac{10 \times 10^{12}}{7200} = 1,388,888.89$ watts

$\Rightarrow \boxed{P \approx 1.39 \text{ MW}}$

c. Calculate the velocity of the car.

Knowing that $V = \frac{d}{t} \Rightarrow V = \frac{500,000}{7,200}$

$\Rightarrow \boxed{V = 69.44 \text{ m/s}}$

d. Determine its kinetic energy given that the mass of the car is M= 1ton.

Knowing that $(KE) = \frac{1}{2}MV^2$

$\Rightarrow KE = 0.5 \times 1000 \times (69.44)^2$

$\Rightarrow KE = 500 \times 4822.0736$

$\Rightarrow KE = 24,411,036.8$ Joules

$\Rightarrow \boxed{KE = 2.41 \text{ MJ}}$

KAWLO (gcerevision.com)

PDF Scanner ACE Scanner

for more past questions and solutions download kawlo kawlo app or visit http://www.gcerevision.com